7. november 2020

# 6250933100

| SBS ref. # | Available compounds |
|---|---|
| 6250933100 | HS • SF |

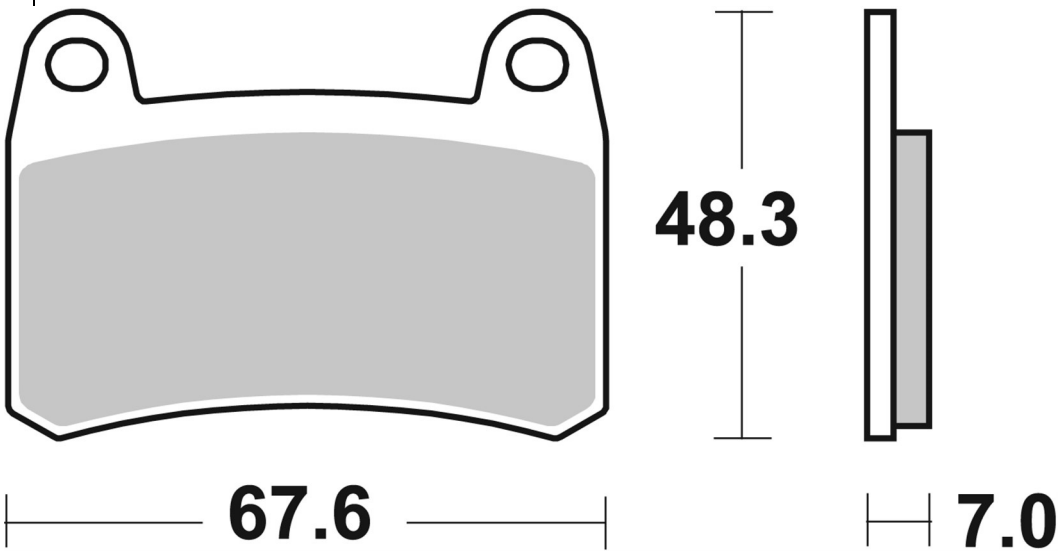

| | | | | | RECOMMENDED | |
|---|---|---|---|---|---|---|
| BENELLI | | 250 | Leoncino | 2018 - 2019 | 6250933100 | 6260832100 |
| BENELLI | BN | 251 | | 2015 - 2019 | 6250933100 | 6260832100 |
| BENELLI | BN | 302 | | 2015 - 2015 | 6250933100 | 6260832100 |
| BENELLI | BN | 302 | R | 2017 - 2019 | 6250933100 | 6260832100 |
| BENELLI | BN | 302 | S | 2018 - 2019 | 6250933100 | 6260832100 |
| BENELLI | BN | 302 | Tornado | 2016 - 2016 | 6250933100 | 6260832100 |
| BENELLI | TRK | 251 | | 2019 - 2020 | 6250933100 | 6260832100 |