7. november 2020

6510678100

SBS ref. #	Available compounds
6510678100	H.CT

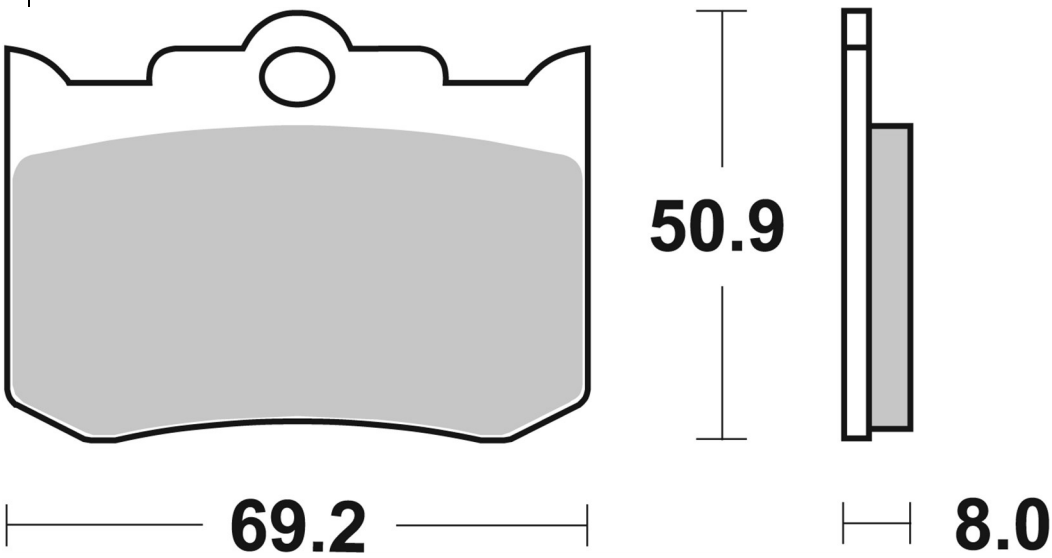

				RECOMMENDED
HHI	0	4 Piston Caliper	0 - 0	6510678100
MOTOR FACTORY	0	4 Piston Caliper front/rear	0 - 0	6510678100
PERFORMANCE MACHINE	0	125 X 4R	0 - 0	6510678100
PERFORMANCE MACHINE	0	125 X 4RSPH	0 - 0	6510678100
PERFORMANCE MACHINE	0	137 X 4B	0 - 0	6510678100
PERFORMANCE MACHINE	0	4 Piston Vintage Caliper	0 - 0	6510678100